© The British Computer Society 2014. All rights reserved.
For Permissions, please email: journals.permissions@oup.com
Advance Access publication on 21 March 2014
doi:10.1093/comjnl/bxu021

Application of Simple Power Analysis to Stream Ciphers Constructed Using Feedback Shift Registers

ABDULAH ABDULAH ZADEH AND HOWARD M. HEYS*

Faculty of Engineering, Memorial University of Newfoundland
**Corresponding author: hheys@mun.ca*

Although power analysis attacks have been extensively applied to block ciphers, only limited research has been done to analyze their effectiveness on stream cipher hardware implementations. In this paper, we investigate methods of simple power analysis applied to stream ciphers based on multiple feedback shift registers (FSRs) and demonstrate the effectiveness of the methods by examining the cipher Grain which involves both a linear and a nonlinear FSR. A divide-and-conquer attack is presented where the attacker guesses the bit values of the FSRs independently and then checks the correctness of the guess using information derived from measured power consumption of the cipher core. Experimental results of the attack applied to simulated power data obtained for a CMOS implementation of Grain show that it is possible to recover directly the cipher state using only about 3000 power samples. For ciphers constructed using a general architecture of multiple FSRs, the attack has the potential to be successful with a complexity substantially less than exhaustive key search.

Keywords: stream ciphers; side channel attacks; simple power analysis; Grain stream cipher

Received 13 June 2013; revised 13 December 2013
Handling editor: Dimitrios Tzovaras

1. INTRODUCTION

The hardware realization of many stream ciphers is more efficient than many common block ciphers, often requiring less area on chip. Because of this advantage, stream ciphers are known as good candidates for devices in constrained environments such as RFID tags, wireless communication devices and smart cards [1, 2].

Side-channel analysis attacks make use of information derived from the physical implementation of a cipher. Such information can be in the form of timing [3], power consumption [4] or electromagnetic leakage [5, 6]. Although most side-channel analyses have been applied to block ciphers, in some cases they have been studied in the context of stream ciphers. For example, in [7], the template attack makes use of a device similar to the one under attack by building a template of information based on power consumption for every possible value for a portion of the key. When attacking the target system, a power consumption trace is then captured and based on comparison to the templates, the correct key bits are identified. Other implementation attacks applied to stream ciphers include the fault attack [8], which obtains information on the cipher by observing the response to faults injected into the cipher hardware, and a scan chain attack [9]. In addition, differential power analysis (DPA) has also been considered in the context of stream ciphers [10–12]. Since DPA makes use of information from power traces, it is closely related to the work in this paper. However, as it typically requires statistically averaging over multiple power traces, it is known to have limited applicability in the context of stream ciphers, except in the limited context of frequent resynchronizations involving the updating of the initialization vector.

The applicability of a simple power analysis (SPA) attack on stream ciphers has been identified in [13]. SPA attacks require only one trace of power consumption measurements to extract information from the cipher. The proposed method is applicable to stream ciphers with just one linear feedback shift register (LFSR) and since most stream ciphers involve several FSRs and typically one or more nonlinear FSRs (NLFSRs), the applicability of the described attack is limited. To broaden the applicability of the SPA attack of [13], in [14], the simple power analysis method is modified for application to stream ciphers using multiple LFSRs. The attacks presented in [13, 14]

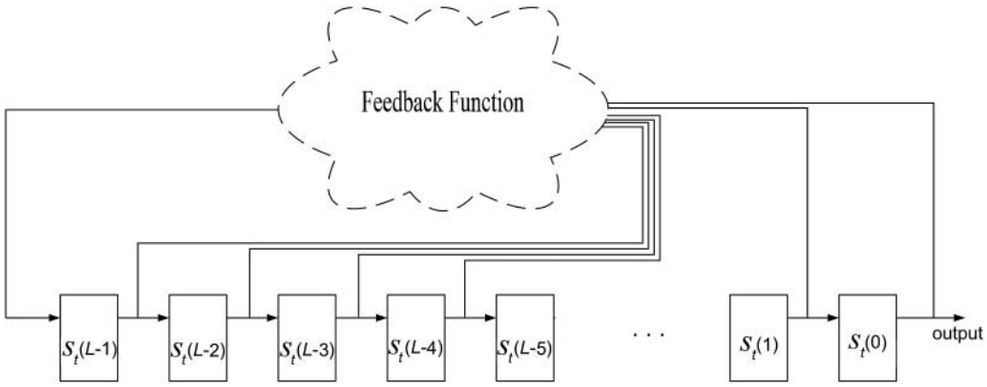

FIGURE 1. Overall architecture of LFSR or NLFSR.

assume theoretically ideal mapping from power consumption measurements to the corresponding cipher data, i.e. the bit values of the LFSRs. However, as shown in [15], when SPA is considered for a system based on a single NLFSR, practical applicability of the attack to a CMOS realization of a stream cipher includes challenges associated with inaccuracies of mapping power consumption measurements to cipher data.

In this paper, we propose a method based on simple power analysis to attack stream ciphers with multiple LFSRs and NLFSRs. For the purposes of our study, the proposed method is applied to the Grain stream cipher, which is constructed from one LFSR and one NLSR [16]. This attack is designed to apply in environments where accurate mapping from power consumption measurements to cipher data cannot be guaranteed. Further, we investigate through experiments, the suitability of this method on a 180 nm CMOS implementation of the Grain stream cipher.

2. BACKGROUND

Stream ciphers typically encrypt by using the XOR operation on each plaintext bit and a bit of an unpredictable pseudorandom sequence, referred to as the keystream [17]. In this section, we introduce some of the basic background of stream cipher construction and power analysis.

2.1. LFSRs and NLFSRs

LFSRs are widely used as a basic component of a keystream generator in many proposed stream ciphers [17], due to their simple hardware structure and the good pseudorandom properties of the generated sequence. A right-shifting LFSR of size L consists of L bits and the output of each step (i.e. as the result of a triggering clock edge in synchronous sequential digital logic hardware) is the rightmost bit. The bit values are shifted to the right at each step and a new bit is injected into the leftmost bit of the register after being produced as a linear combination of bits currently stored in the register. It is well known that if the feedback is chosen as a primitive polynomial, the LFSR can make a sequence of bits with a maximal period of $2^L - 1$. Since the register bit values and resulting outputs are generated from the linear combination of the previous L bit values, the register value of the LFSR at a particular point in time can be easily derived from any previous or following sequence of L consecutive bits of output.

In order to increase the security in some stream ciphers, NLFSRs have been used. In an NLFSR, the feedback is a nonlinear combination of bit values, making analysis of the output stream more difficult due to the nonlinear relationship between bits. The general structure of an LFSR or NLFSR is shown in Fig. 1, where each square represents a register bit or D flip–flop.

2.2. Classical stream cipher constructions

A well known, classical construction method for keystream generators used in stream ciphers is referred to as a nonlinear combination generator and is illustrated in Fig. 2. A nonlinear combination generator combines the k output bits generated by k LFSRs using a nonlinear function. A similar classical construction called a nonlinear filter generator uses one LFSR and a nonlinear filtering function applied to specific state bits within the LFSR to generate the keystream. The general structures of nonlinear combination generators and nonlinear filter generators have been studied extensively [18, 19] and are still used as inspiration for new stream cipher designs. For example, the Grain stream cipher [16] is a variant of these structures which applies a nonlinear function to produce the keystream by selecting bits from the state bits of an interrelated LFSR and NLFSR.

In the classical nonlinear combination generator structure, it is assumed that the key is used to initialize the FSR state bits. Hence, a brute force attack on such a cipher would require the exhaustive search over $2^{L_{\text{tot}}}$ values where L_{tot} is the number

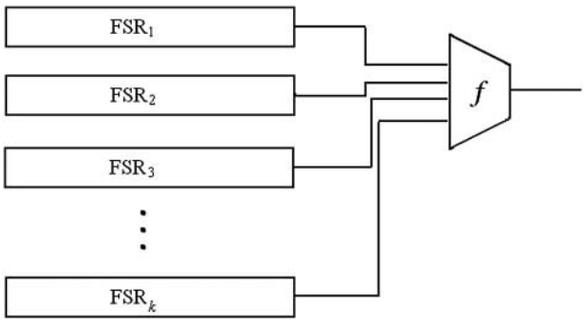

FIGURE 2. Nonlinear combination generator.

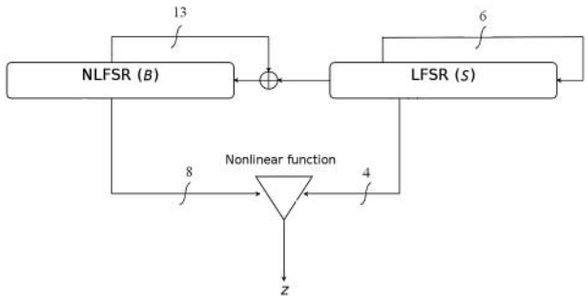

FIGURE 3. Architecture of Grain stream cipher.

of state bits, i.e. the sum of the sizes of all k FSRs used in the keystream generator. Attacks, such as the correlation attack [18], on the nonlinear combination generator have been successfully applied using a divide-and-conquer approach, by targeting one FSR at a time. In such an attack, if the smallest FSR has a size of $L_{\min}$ bits and a correlation attack can determine the $L_{\min}$ bits using a search over all $2^{L_{\min}}$ values of the FSR state, then the cipher's security is considered compromised. The attack considered in this paper uses a similar divide-and-conquer approach based on information derived from power measurements.

Modern stream ciphers may have key sizes that are smaller than the number of state bits determined as the sum of all FSR sizes. In the case of Grain, the cipher key and an initialization vector are used to initialize the cipher state bits. Hence, although the divide-and-conquer approach is preferred over a brute force attack examining all possible cipher states, it is of similar complexity to an exhaustive search of all keys, if the initialization vector is publicly known. Nevertheless, we shall use Grain as the basis for our study of the attack, as Grain is currently a cipher that has been selected as a candidate for application through the eSTREAM process [20]. However, it should be noted that the attack is generally applicable to ciphers that are variants of the classical nonlinear combination generator stream cipher construction.

2.3. Grain

The original version of Grain (now referred to as Grain version 0 or Grain V0) was submitted to the ECRYPT stream cipher project (eSTREAM) [20] in 2005 and designed primarily for hardware implementation with an 80-bit key. A slightly modified version (with small changes to the output function and to the nonlinear feedback function), referred to as Grain version 1 or Grain V1 [16], has been selected for the hardware portfolio by the eSTREAM project. (In addition, a version with a 128-bit key, called Grain-128, has also been defined [16].) The Grain V0/V1 architecture consists of one 80-bit LFSR and one 80-bit NLFSR. The output is a nonlinear combination of LFSR and NLFSR bits. Let S_t and B_t denote the 80-bit LFSR and NLFSR states, respectively, and $s_t(i)$ and $b_t(i)$ $(0 \le i < 80)$, represent the values of bit i in the states at time t. In this paper, we consider the 80-bit version of Grain V1 and Fig. 3 shows the overall architecture. The output (that is, the keystream) at time t, z_t, is determined as described in [16] and the following equations show how to update the LFSR state S_t and the NLFSR state B_t.

$$\begin{aligned}
s_t(80) &= s_t(62) \oplus s_t(51) \oplus s_t(38) \oplus s_t(23) \oplus s_t(13) \\
&\quad \oplus s_t(0), \\
b_t(80) &= s_t(0) \oplus b_t(62) \oplus b_t(60) \oplus b_t(52) \oplus b_t(45) \\
&\quad \oplus b_t(37) \oplus b_t(33) \oplus b_t(28) \oplus b_t(21) \oplus b_t(14) \\
&\quad \oplus b_t(9) \oplus b_t(0) \oplus b_t(60) \cdot b_t(63) \oplus b_t(37) \\
&\quad \cdot b_t(33) \oplus b_t(9) \cdot b_t(15) \oplus b_t(45) \cdot b_t(52) \\
&\quad \cdot b_t(60) \oplus b_t(33) \cdot b_t(28) \cdot b_t(21) \oplus b_t(9) \\
&\quad \cdot b_t(28) \cdot b_t(45) \cdot b_t(63) \oplus b_t(60) \cdot b_t(52) \\
&\quad \cdot b_t(37) \cdot b_t(33) \oplus b_t(63) \cdot b_t(60) \cdot b_t(21) \\
&\quad \cdot b_t(15) \oplus b_t(63) \cdot b_t(60) \cdot b_t(52) \cdot b_t(45) \\
&\quad \cdot b_t(37) \oplus b_t(9) \cdot b_t(15) \cdot b_t(21) \cdot b_t(28) \\
&\quad \cdot b_t(33) \oplus b_t(21) \cdot b_t(28) \cdot b_t(33) \cdot b_t(37) \\
&\quad \cdot b_t(45) \cdot b_t(52). \qquad (1)
\end{aligned}$$

In addition to the 80-bit key, Grain has a 64-bit initialization vector (IV). For details on how to setup the key and resynchronize Grain with a new IV, refer to [16]. Since at any time, determining the 80-bit states of the LFSR and the NLFSR would allow the determination of all subsequent keystream bits, a successful attack of Grain should reveal all 160 bits of the FSRs of Grain.

The original version of Grain was attacked with a correlation attack in [21] where it is shown that it is possible to find the key bits of Grain with a complexity of 2^{43} and 2^{38} keystream bits. In response to this attack, Grain V1 was proposed.

In [22], a time/memory/data tradeoff attack on stream ciphers has been analyzed and, using this approach, it is shown in [23] that for 160 state bits of Grain V1, as an example of the tradeoffs, an attack can be mounted with a preprocessing

complexity of 2^{103}, a time complexity of 2^{78} and the required memory and keystream data of 2^{64} and 2^{57}. Further, tradeoffs can be applied for which the complexities can be improved to 2^{71} for time complexity and required memory, $2^{106.5}$ for preprocessing complexity, and $2^{53.5}$ for required keystream. Since the key size for Grain V1 is 80 bits, the total time complexity (considering both preprocessing time and runtime) of the proposed time/memory tradeoff attacks on Grain V1 are worse than exhaustive key search.

A proposed attack on Grain-128 (which has a 128-bit key and is based on 128-bit registers), based on a cube tester, finds the key with the complexity of 2^{90} and needs 2^{63} bits of memory [24]. This attack is not a threat for the Grain V1 cipher, which only has an 80-bit key.

Other attacks on Grain are applied on weak keys. In [25], a weak key-IV attack offered on Grain V1 is applicable to 2^{64} of 2^{144} possible key-IV combinations. This attack can reveal the key bits with the complexity of $2^{47.5}$ and $2^{44.2}$ keystream bits are needed. A more general weak key attack is proposed in [26] on Grain-128. It can find 2^{118} of the keys with the complexity of 2^{113}.

In [27], the properties of the Grain NLFSR are examined. In particular, the period of a Grain-like NLFSR is characterized and it is shown that the keystream of Grain is periodic with the smallest period of keystream conjectured to be equal to the smallest period of the NLFSR.

2.4. Power analysis attacks

Since the dynamic power dissipation is the major consumed power in high speed circuits, sampling the consumed power gives an idea of the number of switching transistors. This information then can be used to identify characteristics of the data within the device and in the appropriate circumstances reveal bit values of the registers of a cipher implemented within the device. In a power analysis attack, it is assumed the attacker has the ability to measure the power consumed by the cipher. This can be approached by putting a small resistor in series between the power supply and power input pin (or alternatively, the ground and ground pin) of the device. Using a high-speed oscilloscope, the attacker can measure over time the input (or output) current which is proportional to the overall power consumption of the device.

In the approach taken in former research such as [10–14, 28–30], the measured power consumption at the rising edge of the clock is taken to be proportional to the number of register bits changed in the system at that point in time. This is referred to as the *Hamming distance power model*. By taking samples of power data at the triggering clock edges of synchronous digital hardware, this can reveal information about data stored in the registers during particular operations of the cipher.

As summarized in [31], the two basic methods that exist to exploit power measurement are DPA and simple power analysis. DPA makes use of a number of power traces to which statistical methods are applied to determine data-dependent correlations. SPA examines the information from a power trace and directly attempts to determine information about the cipher data and key. In [11], a DPA attack has been applied to Grain. The attack is able to recover the key with a small number of power samples. However, the attack makes use of resynchronizations where the initialization vectors are chosen to be specific values. These conditions constrain the application of the attack to very specific circumstances.

3. THEORETICAL APPLICATION OF SPA TO STREAM CIPHERS

In [13, 14], theoretical simple power analysis methods are offered to analyze LFSR-based stream cipher cores under the assumption of the ideal application of the Hamming distance power model. That is, it is assumed that power measurements can be exactly related to the Hamming distance of data in the registers before and after the triggering edge of the clock with no noise or inaccuracies in the mapping between power information and cipher data. We summarize the results for application of SPA in this ideal environment in this section.

3.1. Basic concepts

In our discussion, we refer to L bit values of a shift register (either an LFSR or an NLFSR) as the state. At clock cycle t, the current state is represented as S_t. The Hamming distance between S_t and S_{t-1} is given as HD_t and is calculated from

$$\mathrm{HD}_t = \sum_{i=0}^{L-1} (s_t(i) \oplus s_{t-1}(i)), \tag{2}$$

where $s_t(i)$ represents the value of bit i of S_t with $s_t(0)$ being the rightmost bit of the LFSR/NLFSR and $\oplus$ representing XOR.

Between two successive clock cycles it can be shown that the difference between the Hamming distances must be one of the three values: $\mathrm{HD}_{t+1} - \mathrm{HD}_t \in \{-1, 0, +1\}$. Based on the Hamming distance power model, defining the theoretical power difference to be PD_t given by

$$\mathrm{PD}_t = \mathrm{HD}_{t+1} - \mathrm{HD}_t, \tag{3}$$

it can be seen that PD_t is proportional to the difference of the measured dynamic power consumption at two consecutive clock cycles at times t and $t+1$, which is an analog variable in watts denoted as MPD_t. Simply, $\mathrm{PD}_t \propto \mathrm{MPD}_t$.

Substituting (3) into (2) results in

$$\mathrm{PD}_t = [s_{t+1}(L-1) \oplus s_t(L-1)] - [s_t(0) \oplus s_{t-1}(0)], \tag{4}$$

where the new bit value for state $t+1$, $s_{t+1}(L-1)$, will be the new value of bit $L-1$ of the register based on the values of S_t.

3.2. Attacking an LFSR-based stream cipher

As described in [13] to attack a stream cipher based on one LFSR and a nonlinear filtering function (as in a filter generator construction [17]), considering operations over GF(2), we can write

$$|\mathrm{PD}_t| = s_t(L) \oplus s_{t-1}(L) \oplus s_t(0) \oplus s_{t-1}(0), \tag{5}$$

where we now denote $s_{t+1}(L-1)$ as $s_t(L)$ and $s_t(L-1)$ as $s_{t-1}(L)$. (In general, we can write $s_{t+j}(i) = s_t(i+j)$ with $s_t(i+j)$ representing the $(i+j)$th bit following bit $s_t(0)$ in the FSR sequence.)

If the measured dynamic power consumption of the LFSR at clock cycle t is equal to the measured dynamic power consumption at clock cycle $t+1$ (that is, $\mathrm{MPD}_t \approx 0$), then we can conclude $\mathrm{PD}_t = 0$ and write $s_t(L) \oplus s_{t-1}(L) \oplus s_t(0) \oplus s_{t-1}(0) = 0$ and, if the measured dynamic power consumption at time t and $t+1$ are not equal (that is $\mathrm{MPD}_t \neq 0$), we can conclude $\mathrm{PD}_t \neq 0$ and write $s_t(L) \oplus s_{t-1}(L) \oplus s_t(0) \oplus s_{t-1}(0) = 1$. For an LFSR, collecting enough MPD_t values and using the linear feedback relation, we can set up a linear system of equations of the S_0 bits, $\{s_0(i)\}$, where $0 \leq i < L$, and determine the keystream sequence.

3.3. Attacking stream ciphers based on multiple LFSRs

In [14], the proposed method in [13] is extended to be applicable to stream ciphers with multiple LFSRs by assuming the measured power difference of the circuit is the summation of individual LFSRs. For example, if the stream cipher has two LFSRs, the total measured power difference of the circuit is $\mathrm{MPD}^{\mathrm{total}} = \mathrm{MPD}^1 + \mathrm{MPD}^2$ where MPD^i is proportional to the theoretical PD of the ith LFSR, PD^i, where $i \in \{1, 2\}$ and $\mathrm{PD}^{\mathrm{total}} = \mathrm{PD}^1 + \mathrm{PD}^2$. Then, when $\mathrm{MPD}^{\mathrm{total}}$ is a large positive level, indicating that $\mathrm{PD}^{\mathrm{total}} = +2$, we know that PD values for both LFSRs are equal to $+1$. After collecting enough power samples, we can set up a system of equations for each LFSR independently and obtain the bit values. This can be extended to be applied to any number of LFSRs that are combined to form a stream cipher.

3.4. Theoretical attack of the Grain stream cipher

To extend the theoretical attack to Grain, in [32], the proposed method in [15, Section 3] (which is applied to a single NLFSR assuming the ideal application of the Hamming distance model) is combined with the method in Section 3.3. In this theoretical circumstance, Grain would be susceptible to power analysis with only a few hundred power samples. However, this is an idealized result and difficulties would exist in mounting a practical attack which can not assume that measured power differences can be perfectly related to register data. In the remainder of the paper, we focus on the practical application of the attack focused on overcoming these difficulties.

4. PRACTICAL APPLICATION OF SPA

The theoretical attacks presented in the previous section assume that power measurements can be used to determine with certainty the theoretical PD, and thereby relate power measurements to the cipher data. In a practical attack, this expectation is naive, since, as discussed in [15], there are many factors which make the mapping between the measured power difference and theoretical PD inaccurate.

For the research in this paper, we investigate practical issues by simulating circuits in CMOS. The circuits are prototyped in TSMC 180 nm standard cell CMOS technology. We have used Cadence Virtuoso Spectre Circuit Simulator version 5.10.41 to obtain the power consumption of the circuits. The power supply of all circuits is 1.8 V. The simulations have been done at room temperature and default noise. In our implementations, we have used a typical positive-edge triggered D flip–flop constructed from six NAND gates (as in [33, Figure 7.11]) and simulations show that, as expected, there is increased power consumption on the triggering edge when the flip–flop state changes in comparison to no change in the flip–flop state. The use of simulated CMOS circuits to study SPA was also applied in [15] to a system based on a single NLFSR.

4.1. Categorization of measured power difference values

To apply SPA to an LFSR/NLFSR based on the measured power consumption of the LFSR/NLFSR, we should map the measured power differences (an analog variable measured in watts) to a categorized power difference, represented as PD^c where $\mathrm{PD}^c \in \{-1, 0, +1\}$ for an individual LFSR/NLFSR. In an ideal circumstance the attacker would determine PD^c to be the theoretical PD value with 100% likelihood (as is assumed in [13, 14]).

In practical applications, the PDs measured on clock edges cannot be mapped perfectly to the theoretical PDs due to factors such as power consumption sources that are not flip–flops (e.g. the combinational logic in the feedback and output functions), clock skew and static power consumption. In most attacks based on power analysis, to overcome these types of inaccuracies, DPA is used where the power consumption measurements are repeated and the average of the observed data is used to filter out noise. However, for stream ciphers, such as Grain, this approach is limited in applicability and can only be applied by making use of power traces from numerous resynchronizations [10, 11]. Our methods in this paper apply a simple power analysis approach even when coping with inaccuracies in the mapping of measured power differences to cipher data.

If we assume that the bits generated by the LFSR/NLFSR are random such that the probability of 0 and 1 are both equally likely, then the probabilities of $\mathrm{PD} = -1$, $\mathrm{PD} = 0$ and $\mathrm{PD} = +1$ for each LFSR/NLFSR are 0.25, 0.5 and 0.25, respectively. In order to map the measured power differences to a PD^c value, we can sort all the measured power differences and then categorize the largest positive 25% of them to $\mathrm{PD}^c = +1$.

TABLE 1. Probability of occurrence of PD values in stream ciphers with two LFSR/NLFSRs such as Grain.

PD value	Probability
-2	$\frac{1}{16} = 0.0625$
-1	$\frac{1}{4} = 0.25$
0	$\frac{3}{8} = 0.375$
$+1$	$\frac{1}{4} = 0.25$
$+2$	$\frac{1}{16} = 0.0625$

Similarly, we can categorize the smallest (i.e. most negative) 25% of the measured power differences to $\mathrm{PD}^c = -1$. The rest of the measured power differences should be categorized to $\mathrm{PD}^c = 0$. This method of categorization can be applied to a system with one LFSR or NLFSR.

In order to determine the categorized PDs of stream ciphers with two FSRs (such as Grain), we can use the same method. Assuming that the probability of generating 0 and 1 in the LFSR and NLFSR are both equal to $\frac{1}{2}$, the probabilities of occurrence of possible PD values are calculated by noting that the PD of the cipher is the sum of PD values of the two FSRs. The resulting probabilities are listed in Table 1. Similar to the proposed method for one FSR systems, to categorize measured power difference values, we sort the measured power differences. Then the 6.25% largest positive measured power differences should be categorized as $\mathrm{PD}^c = +2$ and the 6.25% most negative measured power differences should be categorized as $\mathrm{PD}^c = -2$. Correspondingly, the next 25% of the most positive and negative measured power differences should be categorized as $\mathrm{PD}^c = +1$ and $\mathrm{PD}^c = -1$, respectively. The remaining values are categorized as $\mathrm{PD}^c = 0$.

4.2. Categorization for Grain

Obtaining experimental results from a CMOS implementation of Grain, we have collected 11 700 power samples simulated through the Cadence tools. Applying the categorization method, we found that experimentally only 46.56% of measured power differences were categorized correctly. Although this value is low (that is, well below 100%), it is significantly different from the 27.34% probability of correctly categorizing the measured power differences by random. This is calculated as follows. Let $P\{\mathrm{PD}^c = i\}$ represent the probability of a measured power difference value to be categorized (randomly) as i, $P\{\mathrm{PD} = i\}$ represent the probability of the theoretical PD is equal to i, and $P\{\mathrm{PD}^c = i|\mathrm{PD} = i\}$ represent the conditional probability. The probability of correctness, P_{corr}, is given by

$$P_{\mathrm{corr}} = \sum_{i=\{-2,\ldots,+2\}} P\{\mathrm{PD}^c = i|\mathrm{PD} = i\} \cdot P\{\mathrm{PD} = i\}$$
$$= \sum_{i=\{-2,\ldots,+2\}} P\{\mathrm{PD}^c = i\} \cdot P\{\mathrm{PD} = i\}$$

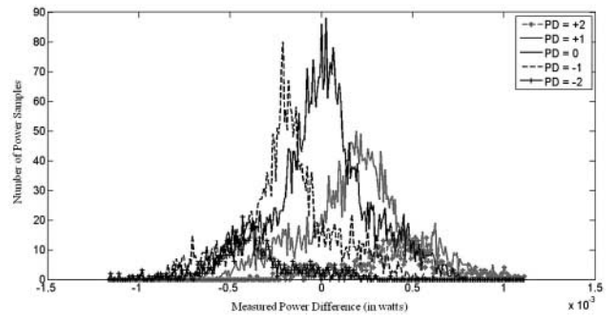

FIGURE 4. Measured power difference distribution for Grain given theoretical PD values.

$$= \left(\frac{1}{16}\right)^2 + \left(\frac{1}{4}\right)^2 + \left(\frac{3}{8}\right)^2 + \left(\frac{1}{4}\right)^2 + \left(\frac{1}{16}\right)^2$$
$$= 0.2734, \tag{6}$$

where $P\{\mathrm{PD} = i\} = P\{\mathrm{PD}^c = i\}$ which can be obtained from Table 1 and where the conditional probability becomes unconditional due to the randomness assumption of the categorization.

To further illustrate the nature of incorrect categorization, we present the following discussion. Based on our experimental results, in Fig. 4, we have presented a graph which shows measured power differences and their corresponding theoretical PD values. As shown in the graph, there are many ranges of measured power differences where there are power samples corresponding to multiple theoretical PD values. For example, there are a total of 646 power samples that have measured power differences falling in the range from 0 to $+4.5 \times 10^{-5}$. Of these, 400 have theoretical values of $\mathrm{PD} = 0$ and 130 have theoretical values of $\mathrm{PD} = +1$. (The remaining 116 power samples have other PD values.) Since the measured power differences in this range are close to zero, we might reasonably expect that the correct categorization would be $\mathrm{PD}^c = 0$, but to categorize in this way, will clearly incorrectly categorize a number of values for which $\mathrm{PD} = +1$ (as well, as other PD values).

Clearly, any proposed method to attack stream ciphers based on simple power analysis should mitigate the problem of incorrect categorization. In the remainder of this paper, the techniques we present deal with this issue.

It should also be noted that the attack draws information from the cipher implementation by considering the dynamic power consumption, associated with changes in the states of gates within the circuit. As is shown by our experiments, this assumption holds well for simulations of 180 nm standard cell CMOS realizations. However, newer CMOS technologies with smaller feature sizes, such as 65 nm CMOS, have more significant relative contributions of static power. As a result, it is expected that getting the necessary precise dynamic power consumption data will be more challenging for the

cryptanalyst, resulting in a larger amount of power trace data required to implement the attack, to the benefit of secure cipher implementation.

5. USING POWER MEASUREMENTS IN A BRUTE FORCE ATTACK

In this section, we show that power measurements can be used for a brute force attack on any FSR-based stream cipher. Assume a stream cipher includes k FSRs and a nonlinear combining function. We assume that the overall power consumption of the circuit is determined by the summation of the power consumption of each LFSR/NLFSR. Hence, the overall measured power difference of the circuit is the summation of measured power differences of each individual FSR. Consequently, the possible PD values for the complete circuit satisfy $-k \leq \mathrm{PD} \leq k$.

Let the summation of the size of all FSRs be L_{tot} so that $L_{\mathrm{tot}} = L_1 + L_2 + \cdots + L_k$, where L_i is the size of FSR i. In a brute-force attack, we try all possible bit configurations for the LFSRs and NLFSRs (i.e. all values for L_{tot} bits). Then we should check whether our guess is correct, typically using known plaintext/ciphertext data with the resulting complexity of this method being $2^{L_{\mathrm{tot}}}$. However, as we shall explain, power consumption measurements can be used in place of the plaintext/ciphertext data used in the check of each guess.

Assume that we have collected n power samples and categorized the measured power differences. In applying brute force based on simple power analysis, after each guess, we should calculate PD values of the cipher based on the guessed bit values of the FSRs for n clock cycles and compare with the categorized measured power differences. In an ideal environment (where there would be no mapping errors from measured power difference to PD^c), if the categorized values match the PD values corresponding to the guess, we know our guess for the bits is correct. In a practical implementation, we will have some number of errors during categorization of measured power differences. If the number of errors between guessed PD values and categorized measured power differences, PD^c, is large (as would be expected for random mappings), we can conclude that some number of the guessed bit values for the cipher FSRs are wrong.

Based on our experiments on Grain, when the guess is correct, the probability of categorized measured power differences being correct should be 0.4656 and, hence, PD^c values are in error with a probability of 0.5344. In comparison, PD^c values for incorrect guesses, should have the probability of errors of about $1 - 0.2734 = 0.7266$. This difference can be used to accurately distinguish the correct guess of FSR bits from incorrect guesses, assuming that n is large enough.

Other approaches can also be used to distinguish the correct guess. Consider Table 2 which lists the probabilities for different combinations of categorized measured power differences and PD. The table shows that, for some PD values, some measured power differences will not happen or have very low probabilities of occurrence. For example, when the theoretical $\mathrm{PD} = -2$, the probability of categorized measured power differences being $+2$ was found to be 0 and, for theoretical PDs of $+2$, the probability of $\mathrm{PD}^c = -2$ was also found to be 0. These (virtually) impossible mappings could help us to distinguish incorrect guesses since they will (virtually) never occur with a correct guess but may occur with an incorrect guess.

TABLE 2. Probability of measured power difference categorization in Grain used for brute force attack.

Theoretical $\mathrm{PD}_{\mathrm{cipher}}$ (x)	$\mathrm{PD}^c_{\mathrm{cipher}}$ (y)	Probability of $\mathrm{PD}^c_{\mathrm{cipher}} = y$ given theoretical $\mathrm{PD}_{\mathrm{cipher}} = x$	Probability of $\mathrm{PD}^c_{\mathrm{cipher}} = y$
+2	+2	0.3076	0.0625
+2	+1	0.5211	0.250
+2	0	0.1475	0.375
+2	−1	0.0239	0.250
+2	−2	0	0.0625
+1	+2	0.1196	0.0625
+1	+1	0.4553	0.250
+1	0	0.2987	0.375
+1	−1	0.1196	0.250
+1	−2	0.0057	0.0625
0	+2	0.0342	0.0625
0	+1	0.2010	0.250
0	0	0.5332	0.375
0	−1	0.1863	0.250
0	−2	0.0453	0.0625
...	...	...	...
−1	−1	0.4610	0.250
...	...	...	...
−2	+2	0	0.0625
...	...	...	...
−2	−2	0.2649	0.0625

In another approach, using the provided probabilities of the last two columns in Table 2, we can compare the probability of correctness for specific PD values. For example, if, for all $\mathrm{PD} = +2$ based on our guess, the probability of the corresponding $\mathrm{PD}^c = +2$ is close to 0.0625, we can conclude that our guess is incorrect and, if that probability is close to 0.3076, we can conclude the guess is correct.

The complexity of applying this method of a brute-force attack to Grain is 2^{160} since we expect that we will need to try guesses for all possible values of the LFSR and the NLFSR. The high complexity of this attack makes it impractical for serious cryptanalytic threat to a stream cipher. However, in the next section we propose a method to reduce the complexity of the attack, thereby potentially compromising the security of practical stream cipher implementations.

6. SPA ATTACK USING DIVIDE-AND-CONQUER ON STREAM CIPHERS WITH MULTIPLE FSRS

To decrease the complexity of the attack we can apply a divide-and-conquer approach by guessing each LFSR/NLFSR independently and then checking whether the guessed bits for the FSR are correct or not. Note that this divide-and-conquer approach is similar to classical correlation attacks applied to nonlinear combination keystream generators [18].

6.1. General attack

One approach to attacking an FSR-based stream cipher, using a divide-and-conquer approach, takes advantage of the impossibility of certain PD^c values for the cipher occurring given one of the FSR PD values. Table 3 illustrates such error scenarios for different numbers, k, of FSRs in the system. For example, for $k = 2$, if one FSR is assumed to have values of $PD = +1$ at various points in time, then if this assumption is correct, no value of $PD^c = -2$ or -1 for the overall cipher must occur at any of these points in time. If it does, it is reasonable to assume that the assumption is incorrect. (Of course, in practice, inaccuracies in categorization of measured power differences may make there be a small non-zero probability that such an error will occur.)

In a divide-and-conquer approach, we can guess the bit values of one FSR, determine the corresponding PD values for the FSR and examine whether impossible PD^c values occur. From this we can determine the error probability as the fraction of impossible PD^c values of the cipher (given by the 3rd column of Table 3). From this error probability, we can determine whether our guess for the bits of the FSR was correct. For example, for $k = 2$, for all FSR values with $PD = +1$ based on the guess of the FSR bits, the error probability for the cipher $PD^c = -2$ is expected to be about 0.0625 if the categorization is random relative to the PD values based on the guessed FSR bits (that is, corresponding to an incorrect guess of the FSR bits), while the error probability should in theory be 0 (or, in practice, very close to 0) when the correct bits of the FSR are guessed.

TABLE 3. Error scenarios for categorized PD.

# of FSRs	Guessed PD_{FSR} (one FSR)	Impossible PD^c_{cipher} (overall cipher)
	$+1$	$-2, -1$
2	0	$-2, +2$
	-1	$+1, +2$
	$+1$	$-3, -2$
3	0	$-3, +3$
	-1	$+2, +3$
	$+1$	$-4, -3$
4	0	$-4, +4$
	-1	$+3, +4$
	$+1$	$-k, -(k-1)$
k	0	$-k, +k$
	-1	$+(k-1), +k$

Using these concepts, an algorithm to attack a stream cipher with multiple FSRs is proposed as follows:

(1) Measure the power consumption of the circuit and calculate a number, n, of measured power difference (MPD) values.
(2) Categorize the measured power differences of the circuit to obtain PD^c values.
(3) For each of the k FSRs of the cipher, repeat the following until the correct guess is determined.
   (a) Try a new guess of the bit values of the FSR.
   (b) Calculate n consecutive theoretical PD values of the FSR based on the guessed bits.
   (c) Compute the error probability based on the calculated PD values of the FSR and the PD^c values of whole circuit.
   (d) Compare the computed error probability with the probability of categorizing measured power differences randomly. If the probability is close to the probability of randomly categorized values, we can conclude the guess is incorrect; if the probability is 0 (or very close to it), the guess is correct.
(4) Return the correct guess for each FSR.

The computational complexity of this algorithm is determined by the need to systematically guess bit values for each FSR individually. This will take the longest for the largest FSR and, therefore, the complexity is $2^{L_1} + 2^{L_2} + \cdots + 2^{L_k} < k2^{L_{\max}}$ power trace analyses, where $L_{\max}$ is the bit size of the largest FSR in the cipher. A power trace analysis consists of the assessment of the n PDs for each guess of an FSR value and is therefore comprised of the steps (a)–(d) of step 3 in the algorithm.

6.2. Applying the attack to Grain

In this section, we examine the experimental results of applying a divide-and-conquer approach to a simulated implementation of Grain. Having obtained experimental data for an implementation of Grain, we outline a slightly different approach to check our guess for the FSR bits than the approach that was used in the previous section, where the impossible scenarios of Table 3 were used to distinguish correct and incorrect guesses. More generally, we can use the probability of any or all PD^c values of the cipher given PD values of one FSR, not just the impossible scenarios, where this probability is zero.

Grain consists of an LFSR and an NLFSR (i.e. $k = 2$). In Table 4, we present the probability that, when a PD value of one of Grain's FSRs is x, the categorized power difference for

TABLE 4. Probability of measured power difference categorization in Grain used for divide-and-conquer attack.

PD_{FSR} (x)	PD^c_{cipher} (y)	$P(PD^c_{cipher} = y \mid PD_{FSR} = x)$ (experimental)	$P(PD^c_{cipher} = y \mid PD_{FSR} = x)$ (theoretical)	$P(PD^c_{cipher} = y)$ (theoretical)
+1	+2	0.1440	0.250	0.0625
+1	+1	0.4075	0.500	0.250
+1	0	0.3216	0.250	0.375
+1	−1	0.1111	0	0.250
+1	−2	0.0158	0	0.0625
0	+2	0.0475	0	0.0625
0	+1	0.2407	0.250	0.250
0	0	0.4215	0.500	0.375
0	−1	0.2398	0.250	0.250
0	−2	0.0505	0	0.0625
−1	+2	0.0105	0	0.0625
−1	+1	0.1096	0	0.250
−1	0	0.3352	0.250	0.375
−1	−1	0.4109	0.500	0.250
−1	−2	0.1338	0.250	0.0625

the whole Grain circuit takes on a value of y. The provided data in the table are based on 11 700 power samples of Grain determined from simulations for 180 nm CMOS. Note that the first column of Table 4 represents the PD value associated with only one FSR; this is different from the data in Table 2 whose first column represents the PD value of the entire cipher. Also, note that, since these results now reflect practical power measurements, the error scenarios given in Table 3 are not impossible to observe since practical inaccuracies occur during the categorization process. However, the error scenarios occur with very small probabilities, e.g. the probability of observing $PD^c_{cipher} = +2$ given the $PD_{FSR} = -1$ is only 1.05%, well below the 6.25% of values expected to be $PD_{cipher} = +2$.

After collecting power samples from the circuit, we have to systematically guess the bit values of the FSR. Based on the guessed bits, we should determine guessed theoretical PD values of one FSR and compare them with the categorized PD, PD^c, values of the overall cipher determined from the measured power consumption. If the resulting experimentally determined conditional probabilities are similar to the fifth column of Table 4, we know that our guess for the bit values of the FSR is incorrect, but, if the probabilities are close to the third column, we can assume the guessed bits are correct. The fourth column, representing the theoretical conditional probabilities (i.e. where no mapping errors occur in categorization), is presented for comparison. In order to complete the attack, the cryptanalyst must individually exhaustively try all values for both the NLFSR and the LFSR, which will take, at most, $2^{80}+2^{80} = 2^{81}$ analyses of the available power samples.

In order to succeed, the attack needs enough power samples, n, to accurately calculate probabilities and the probability of success in the attack increases by increasing the number of collected measured power differences. In the next section, we study the relationship between the probability of success and the required number of power samples.

6.3. Analysis of attack on Grain

In order to determine the practical applicability of the attack on Grain, it is necessary to determine the number of required power samples, n. In order to analyze this, consider the case presented in the Table 4 corresponding to a guessed theoretical PD value of an FSR of +1, resulting in the overall categorized PD^c value for the cipher of +1. Experimental analysis shown in the table indicates that if our guess for the bits of the FSR is correct, the probability of the cipher PD^c value being +1 when the FSR PD = +1 is about 0.4 (experimentally, 0.4075 and, theoretically, 0.5), while, if the guess for the FSR bits is incorrect, the probability is 0.25. Similarly, for cases where the guessed bits of the FSR imply a PD value of −1 for the FSR, the cipher PD^c value should be −1 with a probability of about 0.4 (experimentally, 0.4109 and, theoretically, 0.5) if the guess is correct, with $PD^c = -1$ with probability of 0.25 when the guess is incorrect. Since for an FSR, on average, 50% of the PD values are +1 or −1, we can make use of about half of the measured power samples and the resulting PD^c to verify these two conditional probabilities.

For simplicity, assume that out of n power samples, exactly half correspond to cases of PD = +1 or −1 for the guessed bits of the targeted FSR in the divide-and-conquer attack. (The exact number is a random variable following the binomial distribution with a mean of $n/2$, but variations in this number do not make

a significant difference to the analysis, so the assumption is reasonable.) Let m represent the number of guessed PD values of $+1$ or -1 for which the cipher PD^c value is the same. The probability of occurrence for a particular value of m is given by the binomial distribution:

$$P_{eq}(m) = \binom{n/2}{m} \times \Lambda^m \times (1-\Lambda)^{n/2-m}, \tag{7}$$

where Λ represents the conditional probability of PD^c for the overall cipher given the guessed PD value of the FSR and $\Lambda = 0.4$ when the FSR guess is correct and $\Lambda = 0.25$ when the FSR guess is incorrect.

For the correct guess, the number of occurrences for which the guessed FSR PD is the same as the cipher's PD^c should be, on average, $0.4 \times n/2$. For the incorrect guess, the number of such occurrences will average $0.25 \times n/2$. So, in order to distinguish between a correct guess for the FSR bits and an incorrect guess, we can set a threshold, γ, such that, if the value of m is greater than or equal to the threshold, it is assumed that the correct guess has been made. Otherwise, the incorrect guess has been made. In this case, the probability of correctly distinguishing the correct guess is given by calculating the probability that $m \geq \gamma$ for the probability distribution associated with the correct guess of the FSR value. We can refer to this as a case of a *true accept* and its probability is given by

$$P_{ta} = \sum_{m=\gamma}^{n/2} \binom{n/2}{m} \times (0.4)^m \times (0.6)^{n/2-m}, \tag{8}$$

which is simply derived from (7) with the value $\Lambda = 0.4$. The probability of erroneously accepting an incorrect guess as correct is given by calculating the probability that $m \geq \gamma$ for the probability distribution associated with the incorrect guess of the FSR value. We can refer to this as a case of *false accept* and its probability is given by

$$P_{fa} = \sum_{m=\gamma}^{n/2} \binom{n/2}{m} \times (0.25)^m \times (0.75)^{n/2-m}, \tag{9}$$

which is simply derived from (7) with the value $\Lambda = 0.25$.

In order for the attack on Grain to be a success, we can set the reasonable requirements of $P_{ta} = 99\%$ and $P_{fa} < 2^{-80}$. Setting these requirements will result in a very high likelihood that, after testing all 2^{80} guesses of the FSR value, the only guess distinguished as being correct is indeed the correct value of the FSR state. We can then use (8) and (9) to determine the number of power samples, n, to satisfy these requirements. We can do so most easily by approximating the binomial distributions implied by (7) as a Gaussian distribution, where for an incorrect FSR guess, the mean and variance are given by

$$\begin{aligned} \mu_0 &= 0.25 \cdot n/2, \\ \sigma_0^2 &= (n/2) \times 0.25 \times (1-0.25) = 0.1875 \times n/2. \end{aligned} \tag{10}$$

For the correct FSR guess, the mean and variance of the Gaussian approximation are given by

$$\begin{aligned} \mu_1 &= 0.4 \cdot n/2, \\ \sigma_1^2 &= (n/2) \times 0.4 \times (1-0.4) = 0.24 \times n/2. \end{aligned} \tag{11}$$

Based on the constraints on P_{ta} and P_{fa}, the threshold must be set to at least $10.22\sigma_0$ above μ_0 and at least $2.33\sigma_1$ below μ_1, resulting in the following constraint:

$$10.22\sigma_0 + 2.33\sigma_1 \leq \mu_1 - \mu_0. \tag{12}$$

Substituting (10) and (11) into (12) results in $n \geq 2750$. Hence, we must use about 3000 power samples from the cipher to determine 3000 values of PD^c which may be used to verify which guess of the FSR state is correct. Hence, we may conclude that using 2^{81} tests on about 3000 power samples is sufficient to attack the cipher using simple power analysis.

Note that we have used only the probabilities of having $\mathrm{PD}^c_{\mathrm{cipher}} = +1$ or -1, conditioned on $\mathrm{PD}_{\mathrm{FSR}} = +1$ or -1, respectively, and it would also be possible to make use of all cases in Table 4 to possibly reduce the number of required power samples further. Using a χ^2 goodness-of-fit test, one could analyze all cases to determine whether the experimental conditional probabilities of column 3 corresponding to a correct guess of the FSR is a better fit than the probabilities of column 5 associated with an incorrect guess of the FSR.

6.4. Comparison to other attacks on Grain

Given the complexity of the SPA attack applied to Grain, it is more effective than a brute force approach at guessing the 160 bits of the keystream generator state. Further, since the time/memory/data tradeoff attacks discussed in [23] require pre-processing phases with complexities much more than 2^{80} and large amounts of memory and data, then the SPA attack can be considered to be more efficient than these tradeoff-based attacks.

Consider now the application of an exhaustive key search attack on Grain. In Grain, the unknown state is initialized through the combination of an 80-bit key and a known 64-bit IV. Since the key size of Grain is only 80 bits, it is reasonable to expect that Grain can be attacked, for a publicly known IV value, by trying 2^{80} different guesses for the key and verifying the correct guess by matching about one hundred bits of actual keystream (which can be derived by capturing ciphertext for known plaintext) to the keystream generated based on the guessed key. (In fact, it is shown in [34] that this can be sped up to 2^{79}.) Hence, the proposed SPA attack does not necessarily improve on the complexity of an exhaustive key search attack on Grain. However, there are practical circumstances where the SPA attack can be considered to be much more effective than exhaustive key search and we describe these circumstances in the following discussion.

If the actual keystream used in the comparison corresponds to the keystream bits which immediately follow the initialization (which requires 160 clock cycles), then exhaustive key search is efficient and 2^{80} is a reasonable representation of the attack complexity since each step of the attack only requires the equivalent of the generation of a few hundred bits. However, more practically, the captured ciphertext (corresponding to known plaintext) and the associated keystream might have been generated any number of bits past an initialization of the cipher. For example, the actual keystream used in a comparison to verify the correct key may result after the generation of millions of bits of keystream. In this case, the complexity of exhaustive key search is actually substantially more than 2^{80}, since each step of the attack requires generation of millions of keystream bits. Indeed, one can imagine that, to improve the security of Grain against exhaustive key search, an application using Grain might choose to modify the initialization process by extending it from 160 clock cycles to millions of clock cycles—resulting in a tradeoff favoring security over initialization efficiency. Hence, the SPA attack on Grain with a complexity of 2^{81}, where each step involves processing of 3000 power samples, can be substantially more efficient than a practical exhaustive key search, since the efficiency of the analysis of the power samples is not dependent on the location of the captured power traces used in the attack.

In any case, the results on Grain are useful for illustration purposes and further circumstances for which the attack will be more successful than other approaches are discussed in the following section.

6.5. General applicability of the attack to multiple FSR ciphers

The relative effectiveness of the SPA attack on Grain is limited by the fact that the size of key is the same as the register sizes used in the cipher structure. Hence, a divide-and-conquer approach that targets guessing one register at a time may not improve on exhaustively searching through the key. We have focused on Grain in this paper to illustrate the concepts on an existing cipher proposal. However, this attack has broad applicability to any stream cipher constructed using multiple FSRs and in many cases, the divide-and-conquer approach may indeed prove to be substantially more effective than either a brute force search through all possible keystream generator states or an exhaustive key search.

For example, consider the applicability to a nonlinear combination generator comprised of k FSRs (which can be either LFSRs or NLFSRs), where the sizes of the registers are $L_1, L_2, \ldots, L_k$. The total number of state bits in the keystream generator is given by $L_{\text{tot}} = L_1 + L_2 + \cdots + L_k$. In this case, a brute force attack on the state of the generator would require a complexity of $2^{L_{\text{tot}}}$ and a basic time/memory tradeoff attack [22] would require a complexity of $2^{L_{\text{tot}}/2}$ in time and memory. However, an SPA-based divide-and-conquer attack would require a time complexity of $2^{L_{\min}}$ and, perhaps, a few hundred power samples, where $L_{\min} = \min\{L_1, L_2, \ldots, L_k\}$ to recover some of the state bits. For $L_{\min} \ll L_{\text{tot}}$, this implies that the SPA attack represents a significant improvement over brute force and time/memory tradeoff attacks. Also, if $L_{\min}$ is significantly smaller than the size of the key, then SPA is potentially significantly more successful than exhaustive key search. In the case of Grain, $L_1 = L_2 = 80$, $L_{\min} = 80$ and $L_{\text{tot}} = 160$. Hence, the SPA attack is a significant improvement over brute force search of the state space and an improvement on a time/memory tradeoff, which requires large memory resources and complex pre-processing. However, since the key size is equal to $L_{\min}$, there may not be improvement over exhaustive key search (although, as discussed in Section 6.4, there are circumstances where improvements do exist).

7. CONCLUSION

In this paper we have proposed a simple power analysis attack, applicable to stream ciphers based on multiple LFSRs and/or NLFSRs. The proposed method is applicable in practical implementations as is demonstrated by examining simulated power trace measurements from a CMOS implementation of the Grain stream cipher. These results show that a large category of stream ciphers are practically vulnerable to simple power analysis and care must be taken to design implementations which do not leak power consumption information.

ACKNOWLEDGEMENTS

This work is supported in part by the Natural Sciences and Engineering Research Council (NSERC) of Canada.

REFERENCES

[1] Barbero, A., Horler, G., Kholosha, A. and Ytrehus, O. (2008) Lightweight Cryptography for RFID Devices. *Proc. IET Conf. Wireless, Mobile and Multimedia Networks*, Beijing, January 11–12, pp. 294–297. IET, Stevenage, UK.

[2] Fournel, N., Minier, M. and Ubéda, S. (2007) Survey and Benchmark of Stream Ciphers for Wireless Sensor Networks. *Workshop in Information Security Theory and Practices (WISTP 2007)*, Heraklion, Crete, May 8–11, Lecture Notes in Computer Science 4462, pp. 202–214. Springer, Berlin.

[3] Kocher, P.C. (1996) Timing Attacks on Implementations of Diffie-Hellman, RSA, DSS, and Other Systems. *Proc. 16th Annu. Int. Cryptology Conf. (CRYPTO '96)*, Santa Barbara, CA, August 18–22, Lecture Notes in Computer Science 1109, pp. 104–113. Springer, Berlin.

[4] Kocher, P.C., Jaffe, J. and Jun, B. (1999) Differential Power Analysis. *Proc. 19th Annu. Int. Cryptology Conf. Advances in Cryptology (CRYPTO '99)*, Santa Barbara, CA, August 15–19, Lecture Notes in Computer Science 1666, pp. 388–397. Springer, Berlin.

[5] Quisquater, J.-J. and Samyde, D. (2001) Electromagnetic Analysis (EMA): Measures and Counter-Measures for Smart

Cards. *Int. Conf. Research in Smart Cards (E-smart 2001)*, Cannes, France, September 19–21, Lecture Notes in Computer Science 2140, pp. 200–210. Springer, Berlin.

[6] Gandolfi, K., Mourtel, C. and Olivier, F. (2001) Electromagnetic Attacks: Concrete Results. *Workshop on Cryptographic Hardware and Embedded Systems (CHES 2001)*, Paris, May 13–16, Lecture Notes in Computer Science 2162, pp. 251–261. Springer, Berlin.

[7] Chari, S., Rao, J.R. and Rohatgi, P. (2002) Template Attacks. *Workshop on Cryptographic Hardware and Embedded Systems (CHES 2002)*, Redwood City, CA, August 13–15, Lecture Notes in Computer Science 2523, pp. 13–28. Springer, Berlin.

[8] Hoch, J.J. and Shamir, A. (2004) Fault Analysis of Stream Ciphers. *Workshop on Cryptographic Hardware and Embedded Systems (CHES 2004)*, Boston, August 11–13, Lecture Notes in Computer Science 3156, pp. 240–253. Springer, Berlin.

[9] Agrawal, M., Karmakar, S., Saha, D. and Mukhopadhyay, D. (2008) Scan Based Side Channel Attacks on Stream Ciphers and their Counter-Measures. *INDOCRYPT 2008*, Kharagpur, India, December 14–17, Lecture Notes in Computer Science 5365, pp. 226–238. Springer, Berlin.

[10] Lano, J., Mentens, N., Preneel, B. and Verbauwhede, I. (2004) Power Analysis of Synchronous Stream Ciphers with Resynchronization Mechanism. Presented at Workshop on the State of the Art of Stream Ciphers (SASC 2004), Brugge, Belgium, October 14–15, pp. 327–333. Workshop record available at www.ecrypt.eu.org/stvl/sasc.

[11] Fischer, W., Gammel, B.M., Kniffler, O. and Velten, J. (2007) Differential Power Analysis of Stream Ciphers. *Proc. 7th Cryptographers' track at the RSA Conf. (CT-RSA 2007)*, San Francisco, February 5–9, Lecture Notes in Computer Science 4377, pp. 257–270. Springer, Berlin.

[12] Ebrahimi Atani, R., Mirzakuchaki, S., Ebrahimi Atani, S. and Meier, W. (2008) On DPA-resistive implementation of FSR-based stream ciphers using SABL logic styles'. *Int. J. Comput. Commun. Control*, **3**, 324–335.

[13] Burman, S., Mukhopadhyay, D. and Veezhinathan, K. (2007) LFSR Based Stream Ciphers are Vulnerable to Power Attacks. *INDOCRYPT 2007*, Chennai, India, December 9–13, Lecture Notes in Computer Science 4859, pp. 384–392. Springer, Berlin.

[14] Zadeh, A.A. and Heys, H.M. (2012) Applicability of Simple Power Analysis to Stream Ciphers Using Multiple LFSRs (2012) *Proc. Canadian Conf. Electrical and Computer Engineering (CCECE 2012)*, Montreal, May 29–2, pp. 1–6. IEEE, Piscataway, NJ.

[15] Zadeh, A.A. and Heys, H.M. (2013) Simple power analysis applied to nonlinear feedback shift registers. *IET Information Security*. IET, Stevenage, UK (to appear).

[16] Hell, M., Johansson, T., Maximov, A. and Meier, W. (2008) The Grain Family of Stream Ciphers. *New Stream Cipher Designs*, Lecture Notes in Computer Science 4986, pp. 179–190. Springer, Berlin.

[17] Menezes, A.J., van Oorschot, P.C. and Vanstone, S.A. (1997) *Handbook of Applied Cryptography*. CRC Press, Boca Raton, FL.

[18] Siegenthaler, T. (1985) Decrypting a class of stream ciphers. *IEEE Trans. Comput.*, **34**, 81–85.

[19] Rueppel, R.A. (1986) *Analysis and Design of Stream Ciphers*. Springer, Berlin.

[20] Homepage for 'eSTREAM: the ECRYPT Stream Cipher Project', www.ecrypt.eu.org/stream.

[21] Berbain, C., Gilbert, H. and Maximov, A. (2006) Cryptanalysis of Grain. *Proc. Fast Software Encryption (FSE2006)*, Graz, Austria, March 15–17, Lecture Notes in Computer Science 4047, pp. 15–29. Springer, Berlin.

[22] Biryukov, A. and Shamir, A. (2000) Cryptanalytic Time/Memory/Data Tradeoffs for Stream Ciphers. *Proceedings of ASIACRYPT 2000*, Kyoto, Japan, December 3–7, Lecture Notes in Computer Science 1976, pp. 1–13. Springer, Berlin.

[23] Bjorstad, T.E. (2008) Cryptanalysis of Grain using time/memory/data tradeoffs. eSTREAM Phase 3 Archive, www.ecrypt.eu.org/stream/papersdir/2008/012.pdf.

[24] Dinur, I., Güneysu, T., Paar, C., Shamir, A. and Zimmerman, R. (2011) An Experimentally Verified Attack on Full Grain-128 using Dedicated Reconfigurable Hardware. *ASIACRYPT 2011*, Seoul, December 4–8, Lecture Notes in Computer Science 7073, pp. 327–343. Springer, Berlin.

[25] Zhang, H. and Wang, X. (2009) Report 2009/109: Cryptanalysis of stream cipher Grain family. Cryptology ePrint Archive, International Association of Cryptologic Research, available at www.iacr.org.

[26] Dinur, I. and Shamir, A. (2011) Breaking Grain-128 with Dynamic Cube Attacks. *Proc. Fast Software Encryption (FSE 2011)*, Lyngby, Denmark, February 14–16, Lecture Notes in Computer Science 6733, pp. 167–187. Springer, Berlin.

[27] Hu, H. and Gong, G. (2011) Periods on two kinds of nonlinear feedback shift registers with time varying feedback functions. *Int. J. Found. Comput. Scie.*, **22**, 1317–1329.

[28] Örs, S. B., Oswald, E. and Preneel, B. (2004) Power Analysis Attacks on an FPGA—First Experimental Results. *Workshop on Cryptographic Hardware and Embedded Systems (CHES 2003)*, Cologne, Germany, September 7–10, Lecture Notes in Computer Science 2279, pp. 35–50. Springer, Berlin.

[29] Örs, S.B., Gurkaynak, F., Oswald, E. and Preneel, B. (2004) Power Analysis Attacks on an ASIC AES Implementation. *Proc. Information Technology: Coding and Computing (ITCC 2004)*, Las Vegas, NV, April 5–7, pp. 546–552. IEEE, Piscataway, NJ.

[30] Standaert, F.X., Peeters, E., Rouvroy, G. and Quisquater, J.-J. (2006) An overview of power analysis attacks against field programmable gate arrays. *Proc. IEEE*, **94**, 383–394.

[31] Kocher, P.C., Jaffe, J., Jun, B. and Rohatgi, P. (2011) Introduction to differential power analysis. *J. Cryptogr. Eng.*, **1**, 5–27. Springer, Berlin.

[32] Zadeh, A.A. and Heys, H.M. (2013) Theoretical Simple Power Analysis of the Grain Stream Cipher. *Proceedings of Canadian Conf. Electrical and Computer Engineering (CCECE 2013)*, Regina, Canada, May 5–8, pp. 1–5. IEEE, Piscataway, NJ.

[33] Brown, S. and Vranesic, Z. (2009) *Fundamentals of Digital Logic with VHDL Design* (3rd edn). McGraw-Hill, New York.

[34] De Cannière, C., Küçük, Ö. and Preneel, B. (2008) Analysis of Grain's Initialization Algorithm. *AFRICACRYPT 2008*, Casablanca, Morocco, June 11–14, Lecture Notes in Computer Science 5023, pp. 276–289. Springer, Berlin.

Copyright of Computer Journal is the property of Oxford University Press / USA and its content may not be copied or emailed to multiple sites or posted to a listserv without the copyright holder's express written permission. However, users may print, download, or email articles for individual use.